Sensor-switched LED floodlight

XLED home 2 XL S

V2 graphite
EAN 4007841 030056
Article number 030056

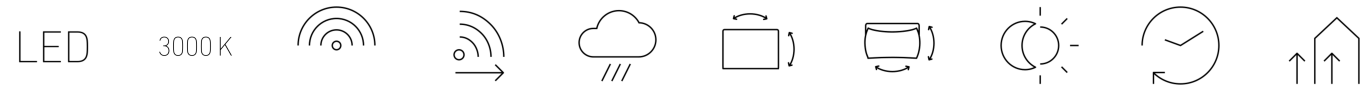

30 years (Ø 4,5h / day) | 3000K warm-white | infrared sensor 180° | max. 10 m | IP44 | 180° horizontal, 180° vertikal | 180° horizontal, 90° vertical | 2 - 2000 lux | 8 sec - 35 min | Ideal 2 m

Function description

Day-bright light in XL size. Powerful XLED home 2 XL S sensor-switched outdoor floodlight with 10 m sensor reach. Ideal for illuminating larger areas such as driveways, courtyards and gardens. Swivelling precision IR sensor covering 180°. Fully swivelling LED panel (180°, horizontally and vertically). Superior opal cover for optimum lighting. 2124 lm, 19,3 W, 180° angle of coverage, high thermal conductivity magnesium composite cooling system (HCMC).

Technical specifications

Dimensions (L x W x H)	161 x 180 x 240 mm
With lamp	Yes, STEINEL LED system
With motion detector	Yes
Manufacturer's Warranty	5 years
Settings via	Potentiometers
Version	graphite
PU1, EAN	4007841030056
Application, place	Outdoors
Application, room	outdoors, all round the building, terrace / balcony, courtyard & driveway
Colour	Anthracite
Installation site	wall, corner
Installation	Wall, corner, Surface wiring
IP-rating	IP44
Protection class	II
Ambient temperature	-20 – 40 °C
Housing material	Plastic

Mechanical scalability	No
Reach, radial	r = 5 m (39 m^2)
Reach, tangential	r = 10 m (157 m^2)
Photo-cell controller	Yes
Cover material	sticker
Luminous flux total product	2124 lm
Measured luminos flux (360°)	2124 lm
Total product efficiency	110 lm/W
Colour temperature	3000 K
Colour variation LED	SDCM3
Lamp	LED cannot be replaced
LED life expectancy (max. °C)	50000 h
Drop in luminous flux in accordance with LM80	L70B10
LED cooling system	HCMC (High Conductive Magnesium Composite)
Twilight setting	2 – 2000 lx
Time setting	8 s – 35 Min.

Sensor-switched LED floodlight

XLED home 2 XL S

V2 graphite
EAN 4007841 030056
Article number 030056

Technical specifications

Cover material	Plastic, opal
Mains power supply	220 – 240 V / 50 – 60 Hz
Mounting height max.	4,00 m
Sneak-by guard	Yes
Capability of masking out individual segments	Yes
Electronic scalability	No

Basic light level function	No
Twilight setting TEACH	No
Interconnection	No
Output	19,3 W
Optimum mounting height	2 m
Detection angle	180 °

Accessories

EAN 4007841 053086	Corner wall mount XLED Home 2/ Pro 240

Sensor-switched LED floodlight

XLED home 2 XL S

V2 graphite
EAN 4007841 030056
Article number 030056

Detection Zone

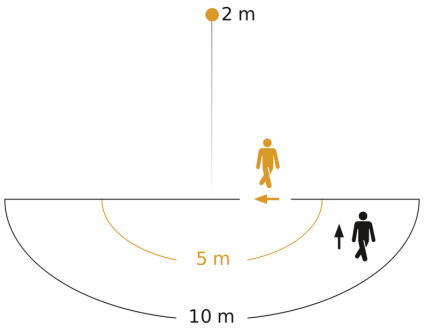

Possible mounting height: 1,80 m – 4,00 m
Orange: radial
Black: tangential

Dimension Drawing

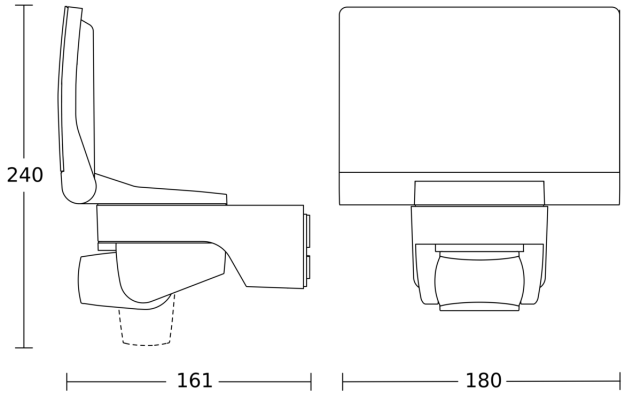

Light Distribution Curve

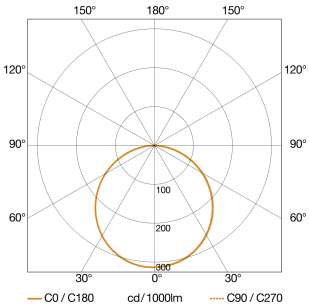

Output	19,3 W
With lamp	Yes, STEINEL LED system
Lamp	LED cannot be replaced
Measured luminos flux (360°)	2124 lm
Colour temperature	3000 K
Colour Rendering Index	80-89
LED life expectancy (max. °C)	50000 h
LED cooling system	HCMC (High Conductive Magnesium Composite)
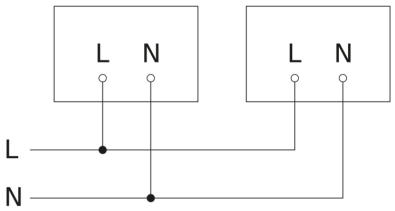
Circuit diagram